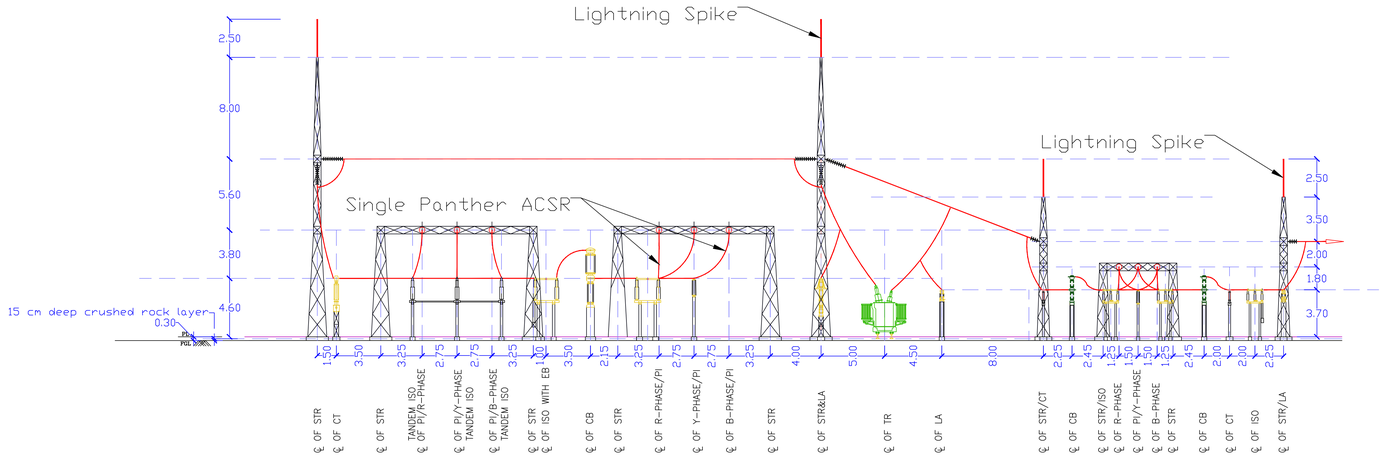

SECTION (A - A)

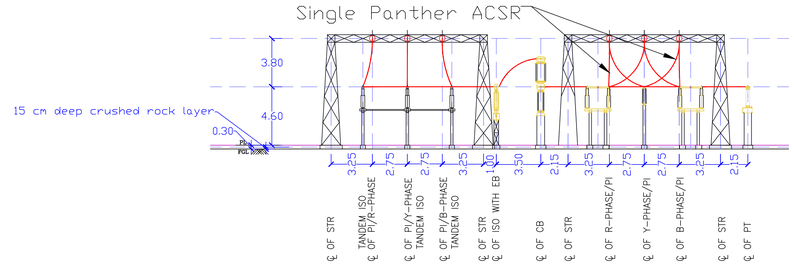

SECTION (D - D)

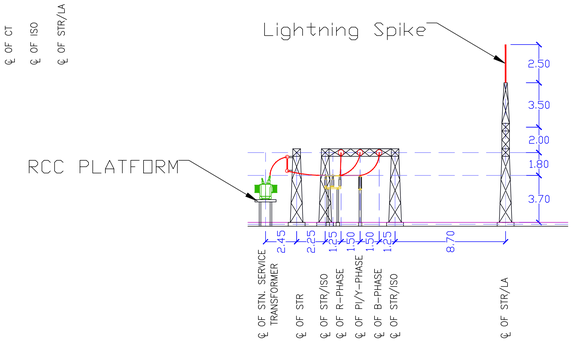

SECTION (E - E)

SECTION (G - G)

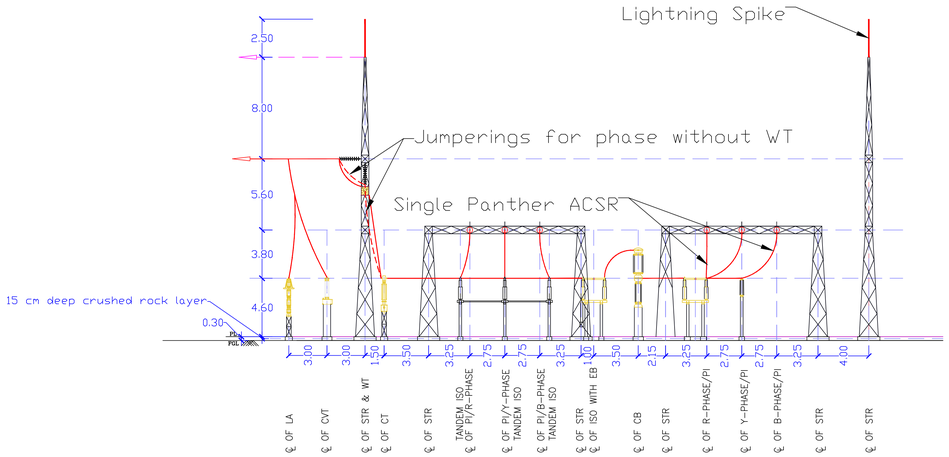

SECTION (C - C)

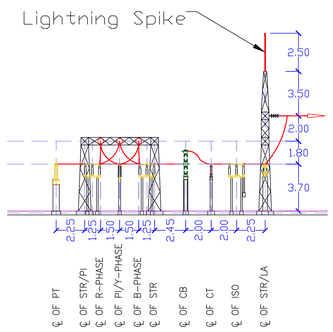

SECTION (F - F)

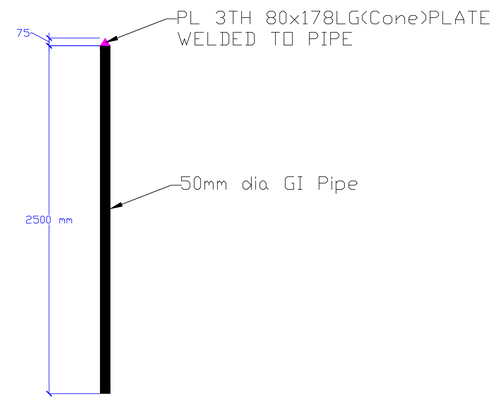

LIGHTNING SPIKE
(Enlarged view)

EQUIPMENT LEGENDS

REV.	REVISION	DATE		
			APPRD. BY-	
			CHECKD. BY-	
			PREP. BY-	

ASSAM ELECTRICITY GRID CORPORATION LTD.

AZARA 132/33 KV SUBSTATION

DRAWING_TITLE
SUBSTATION LAYOUT DIAGRAM
(PLAN & SECTIONS)

DRAWING_NUMBER
AEGCL/AZARA SS/LO/02

SHEET
2 OF 2