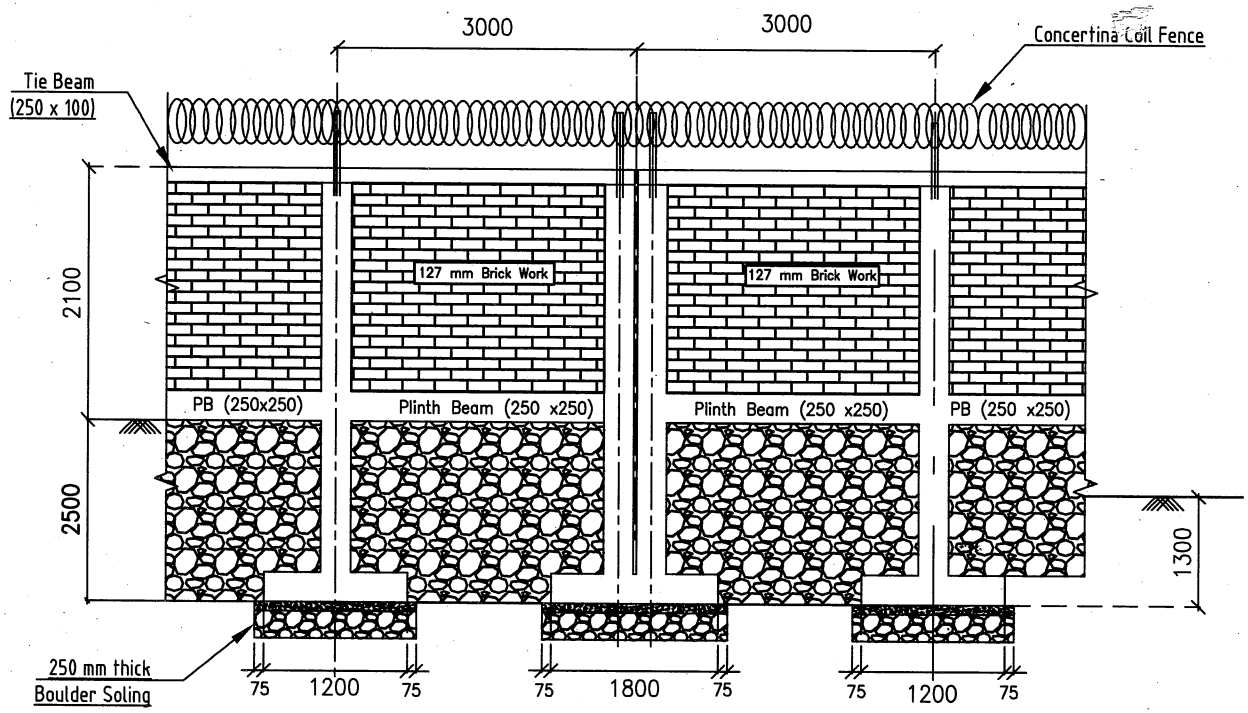

Typical Section

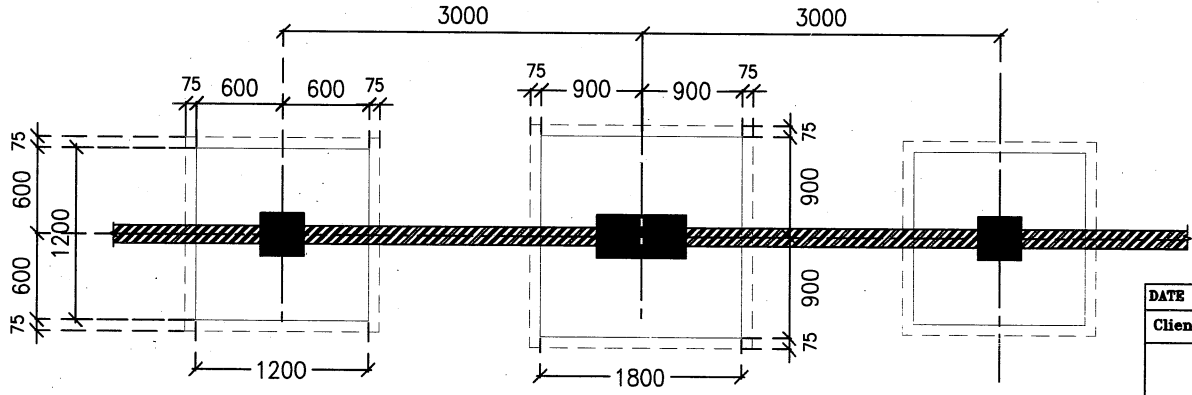

Foundation Plan

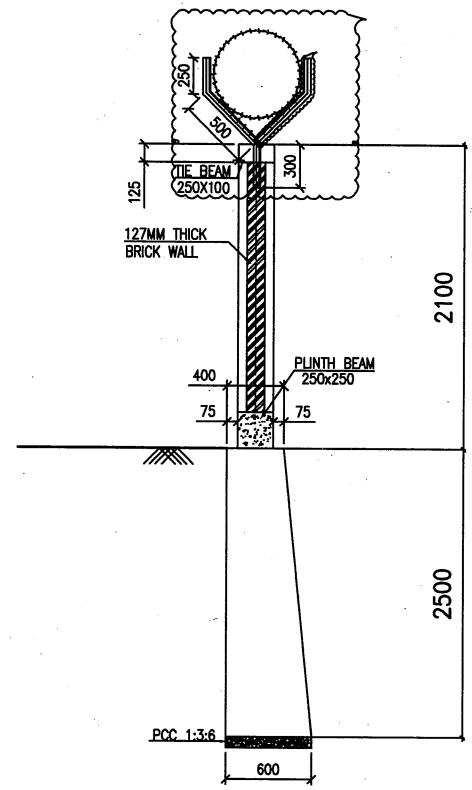

SECTION A-A

Note :

1. Expansion joint should be provided at 25m Spacing.
2. Concrete Grade should be M20 (Nominal mix), and steel grade should be Fe500D and above
3. Expansion joint of min 25 mm should be provided.
4. The brick used should be of 1st Quality having crushing strength value greater than 75 kg/Sq.Cm
5. The mortar for brickwork is 1:6 and for plaster 1:4

DATE	FIRST SUBMISSION	DESCRIPTION
Client Name :	ASSAM ELECTRICITY GRID CORPORATION LIMITED	
	Title : Tentative drawing of boundary wall at 132kV Hatsingimari GSS (Part A)	Paper Size A3
		Scale NTS
Page 01/02	Contractor Name : RA Associates	

Nagan
Junior Manager (Civil)
Mirza T & T Circle
AEGCL, Mirza

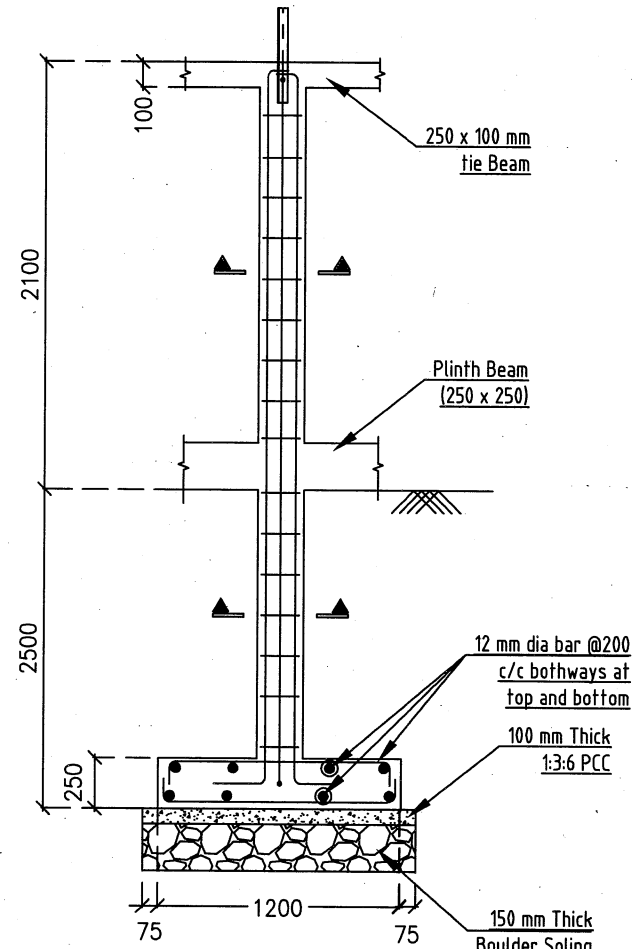

Section of F1

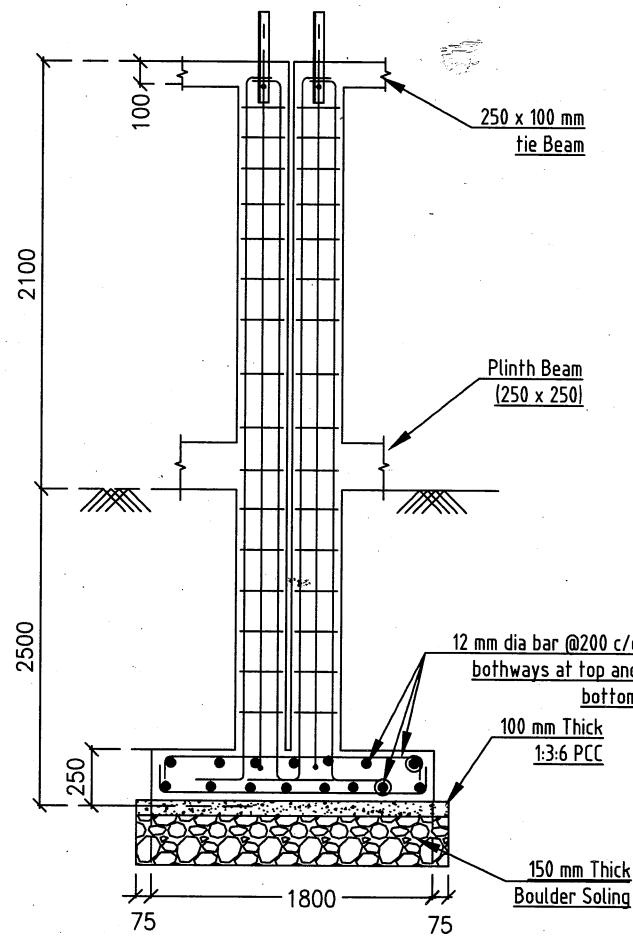

Section of F2

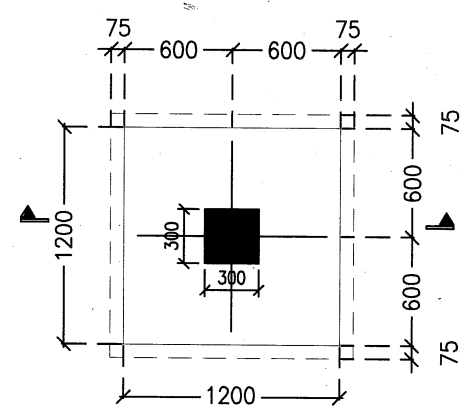

Foundation F1

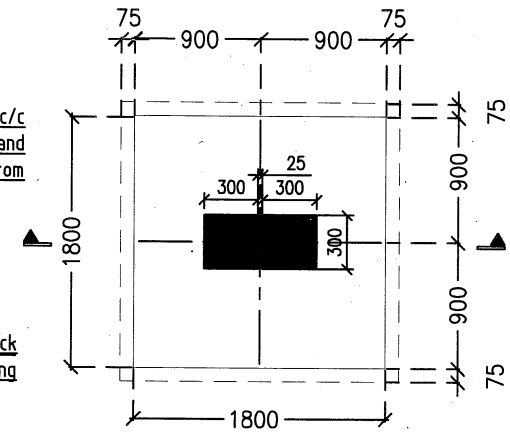

Foundation F2

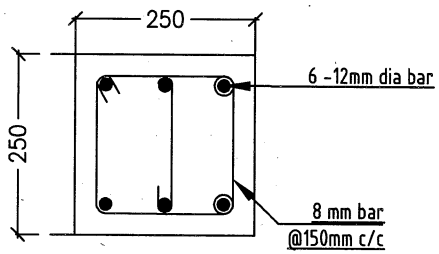

Plinth Beam Section

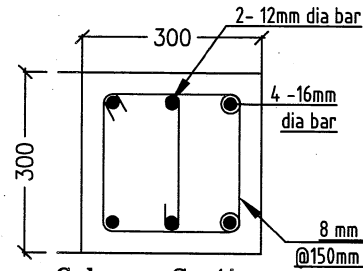

Column Section

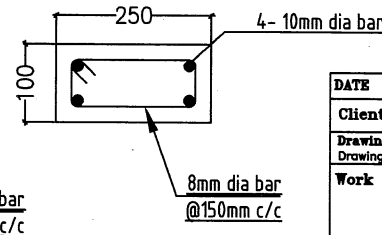

Tie Beam

DATE	FIRST SUBMISSION	DESCRIPTION
Client Name :	ASSAM ELECTRICITY GRID CORPORATION LIMITED	
Drawing Kind : Drawing For Approval.	Title : Tentative drawing of boundary wall at 132kV Hatsingimari GSS (Part A)	Paper Size A3
Work order No. :		Scale NTS
Page 02/02	Contractor Name : RA Associates	

Manager (Civil)
Mirza T & T Civil
AEGCL, Mirza

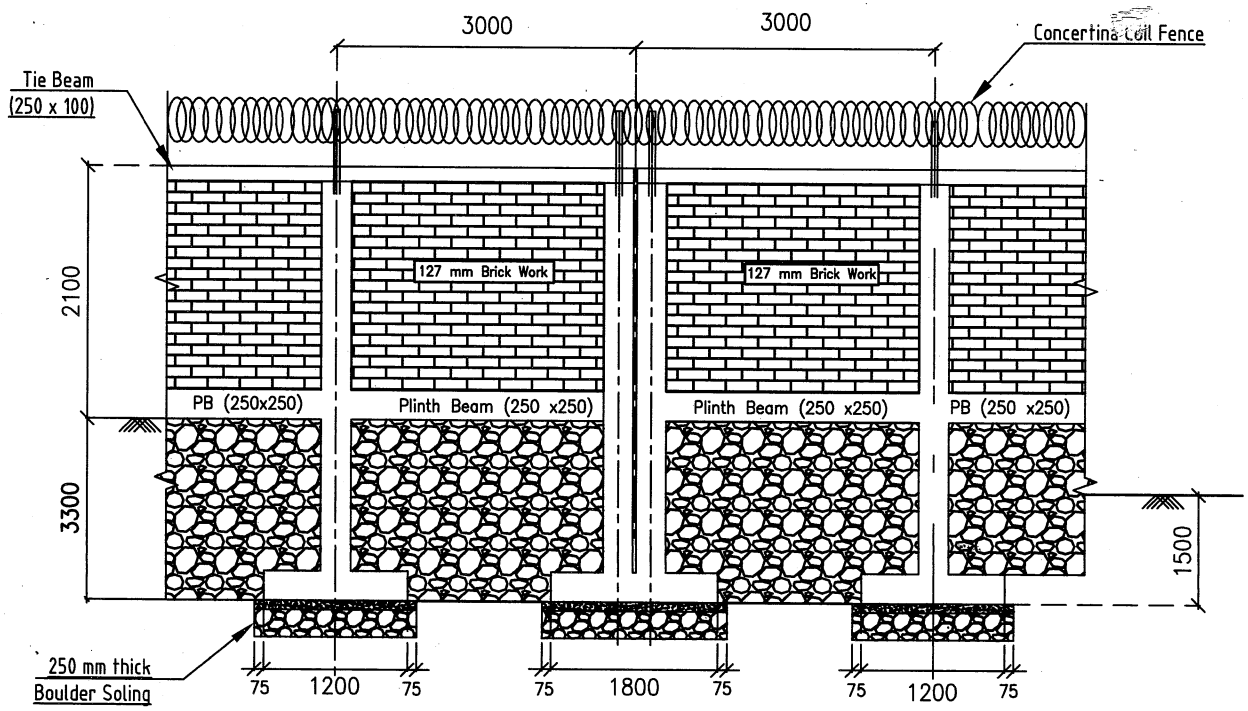

Typical Section

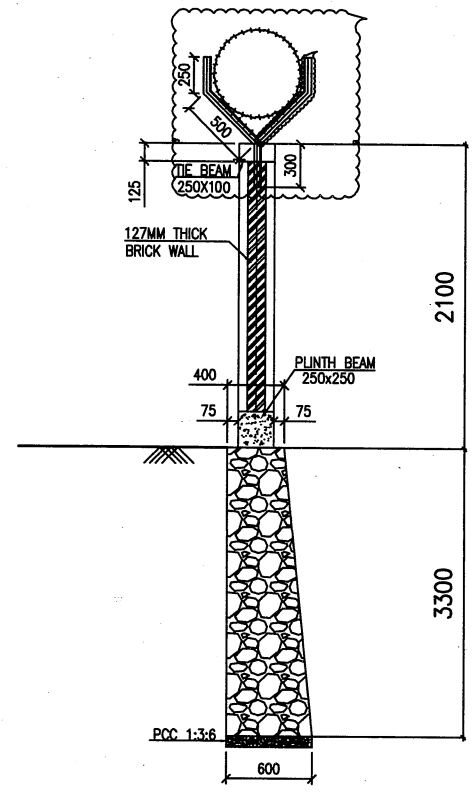

SECTION A-A

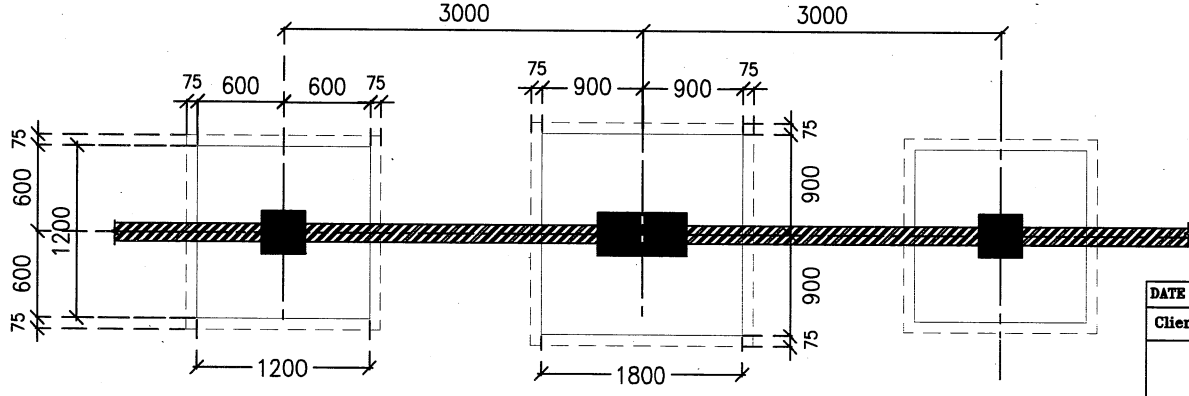

Foundation Plan

Note :

1. Expansion joint should be provided at 25m Spacing.
2. Concrete Grade should be M20 (Nominal mix), and steel grade should be Fe500D and above
3. Expansion joint of min 25 mm should be provided.
4. The brick used should be of 1st Quality having crushing strength value greater than 75 kg/Sq.Cm
5. The mortar for brickwork is 1:6 and for plaster 1:4

DATE	FIRST SUBMISSION	DESCRIPTION
Client Name :	ASSAM ELECTRICITY GRID CORPORATION LIMITED	
	Title : Tentative drawing of boundary wall at 132kV Hatsingimari GSS (Part B)	Paper Size A3 / Scale NTS
Page 01/02	Contractor Name : RA Associates	

Nayan
Mirza T & T Circle
AEGCL, Mirza

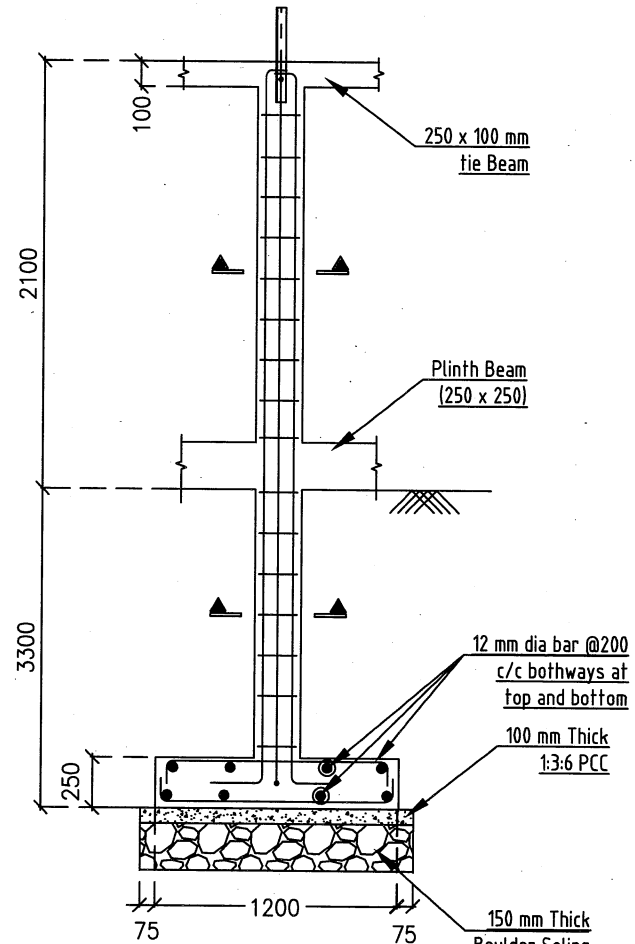

Section of F1

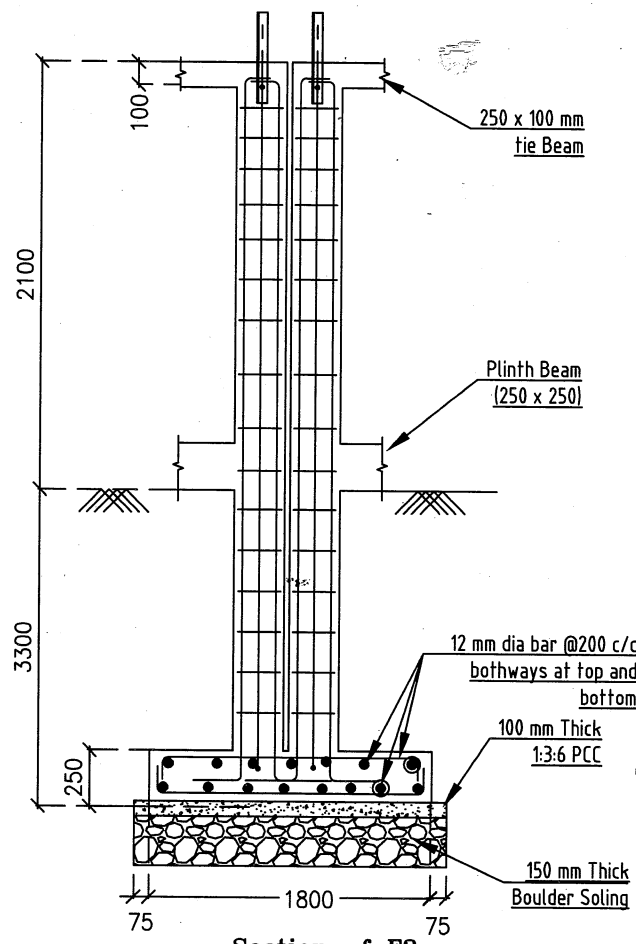

Section of F2

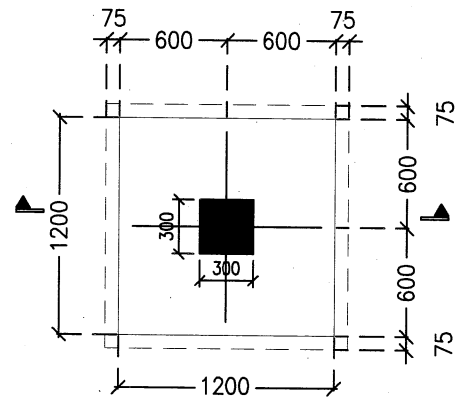

Foundation F1

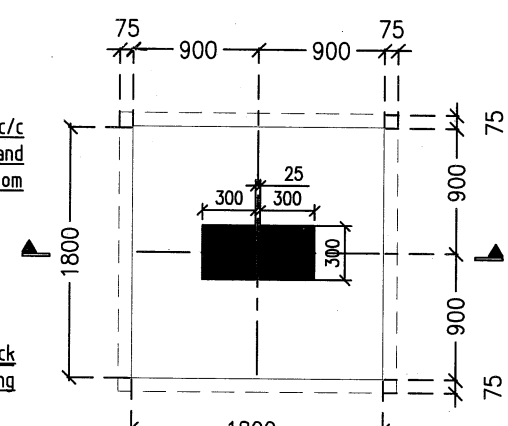

Foundation F2

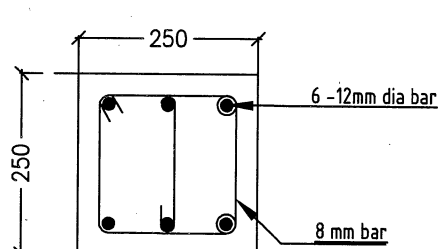

Plinth Beam Section

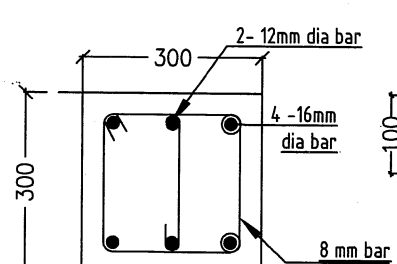

Column Section

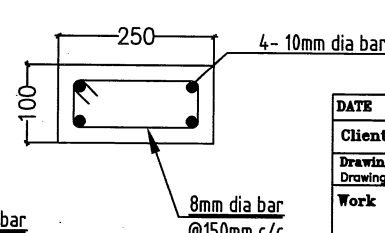

Tie Beam

DATE	FIRST SUBMISSION	DESCRIPTION
Client Name :	ASSAM ELECTRICITY GRID CORPORATION LIMITED	
Drawing Kind : Drawing For Approval.	Title : Tentative drawing of boundary wall at 132kV Hatsingimari GSS (Part B)	Paper Size A3
Work order No. :		Scale NTS
Page 02/02	Contractor Name : RA Associates	

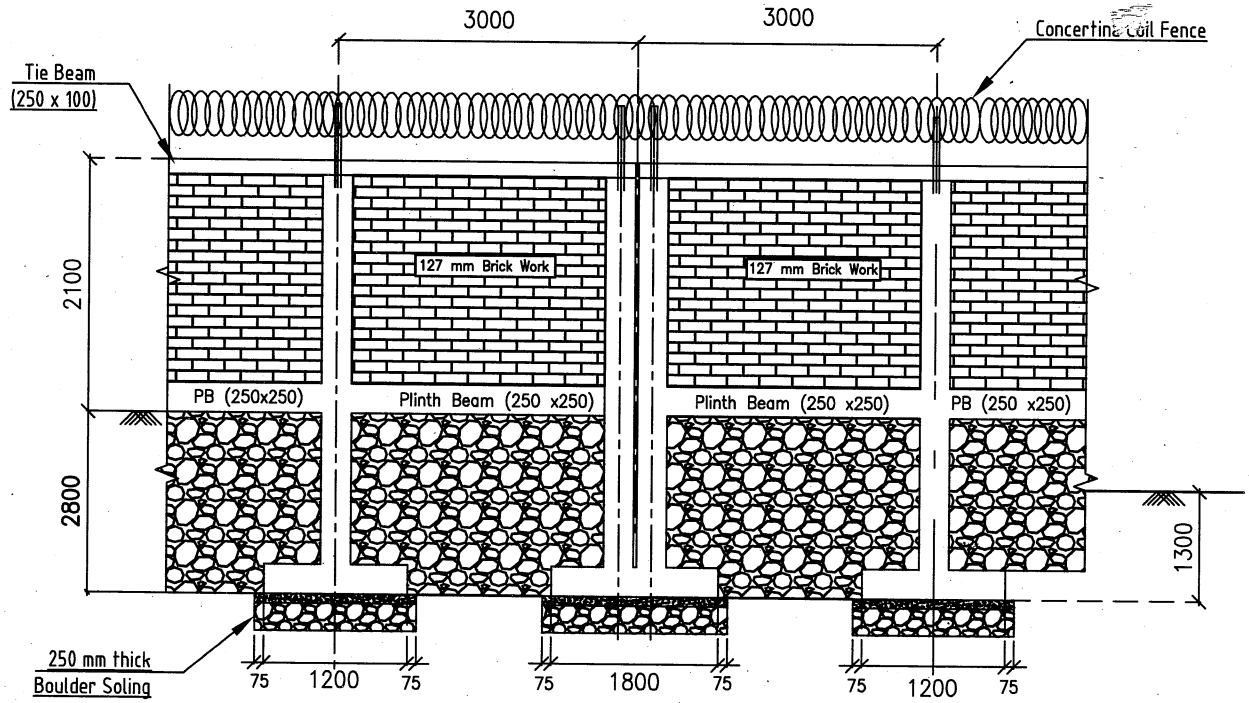

Typical Section

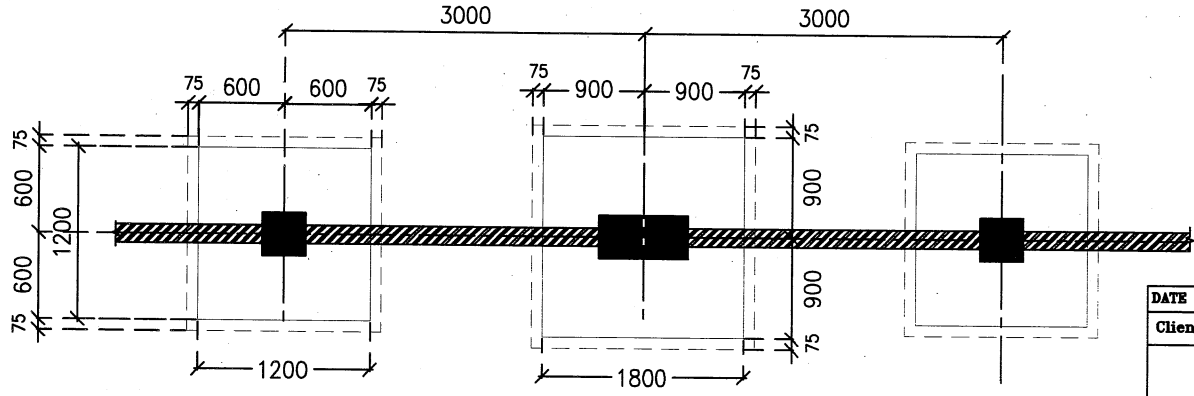

Foundation Plan

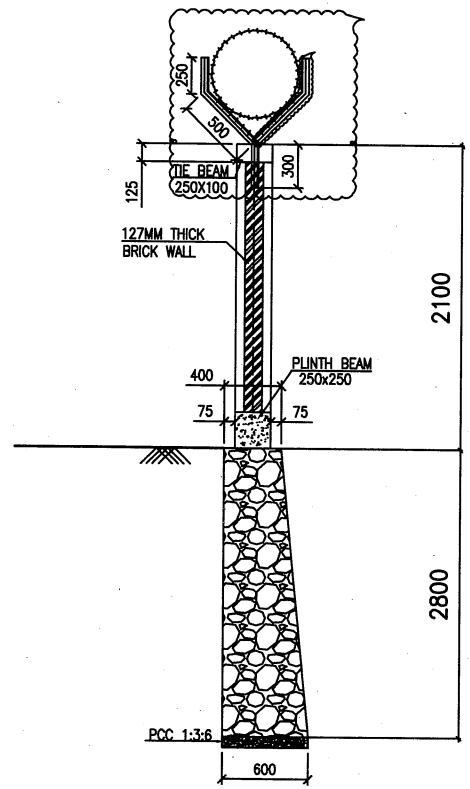

SECTION A-A

Note :

1. Expansion joint should be provided at 25m Spacing.
2. Concrete Grade should be M20 (Nominal mix), and steel grade should be Fe500D and above
3. Expansion joint of min 25 mm should be provided.
4. The brick used should be of 1st Quality having crushing strength value greater than 75 kg/Sq.Cm
5. The mortar for brickwork is 1:6 and for plaster 1:4

DATE	FIRST SUBMISSION	DESCRIPTION
Client Name :	ASSAM ELECTRICITY GRID CORPORATION LIMITED	
Junior Manager Mirza T & T Circle AEGCL, Nuza	Title: Tentative drawing of boundary wall at 132kV Hatsingimari GSS (Part C)	Paper Size A3 / Scale NTS
Page 01/02	Contractor Name : RA Associates	

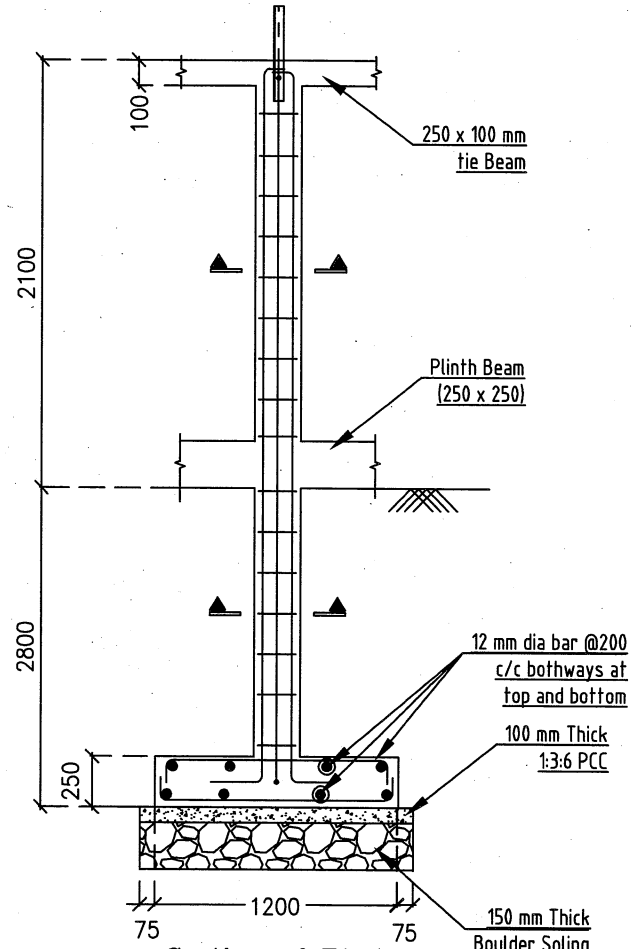

Section of F1

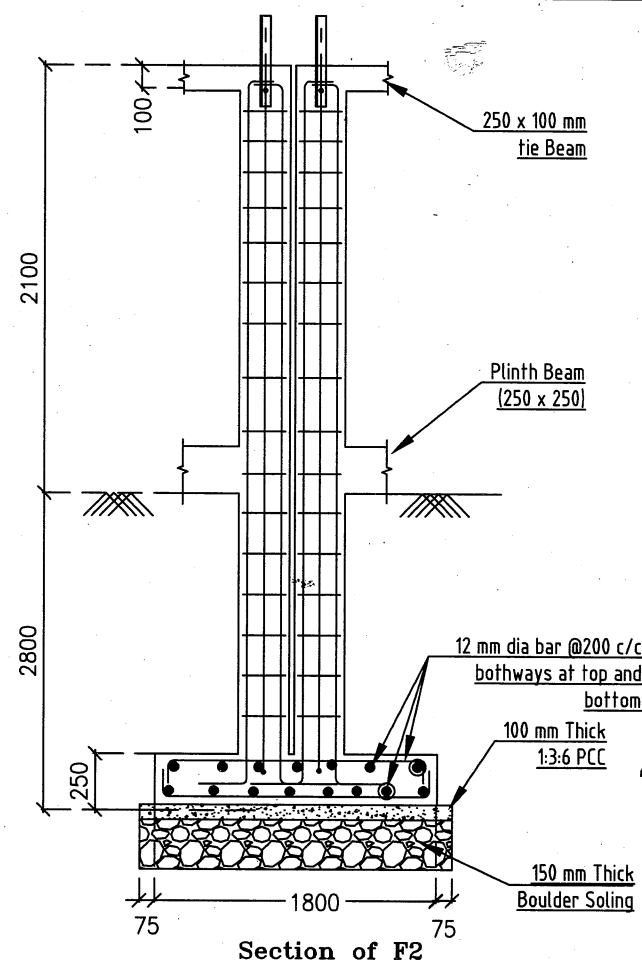

Section of F2

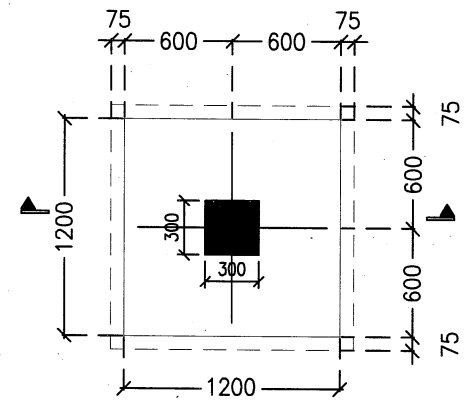

Foundation F1

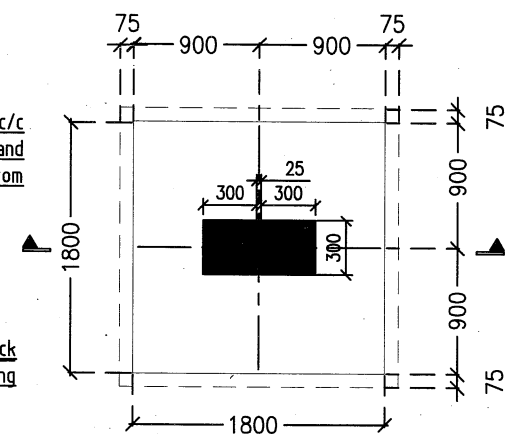

Foundation F2

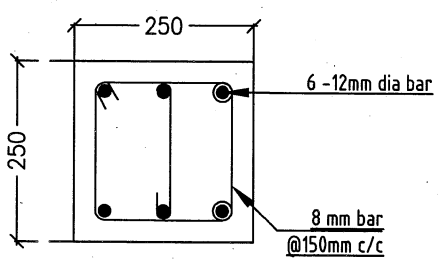

Plinth Beam Section

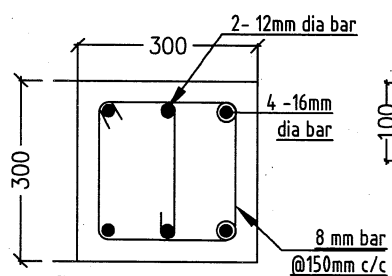

Column Section

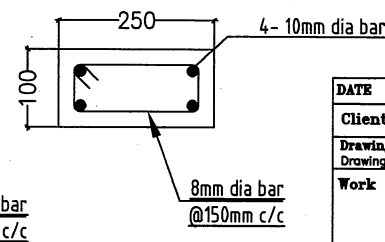

Tie Beam

DATE	FIRST SUBMISSION	DESCRIPTION	
Client Name :	ASSAM ELECTRICITY GRID CORPORATION LIMITED		
Drawing Kind : Drawing For Approval.		Title : Tentative drawing of boundary wall at 132kV Hatsingimari GSS (Part C)	Paper Size A3
Work order No. :			Scale NTS
Page 02/02		Contractor Name : RA Associates	

Nayan
Senior Manager (Civil)
Mirza T & T Civil
AEGCL, Mirza

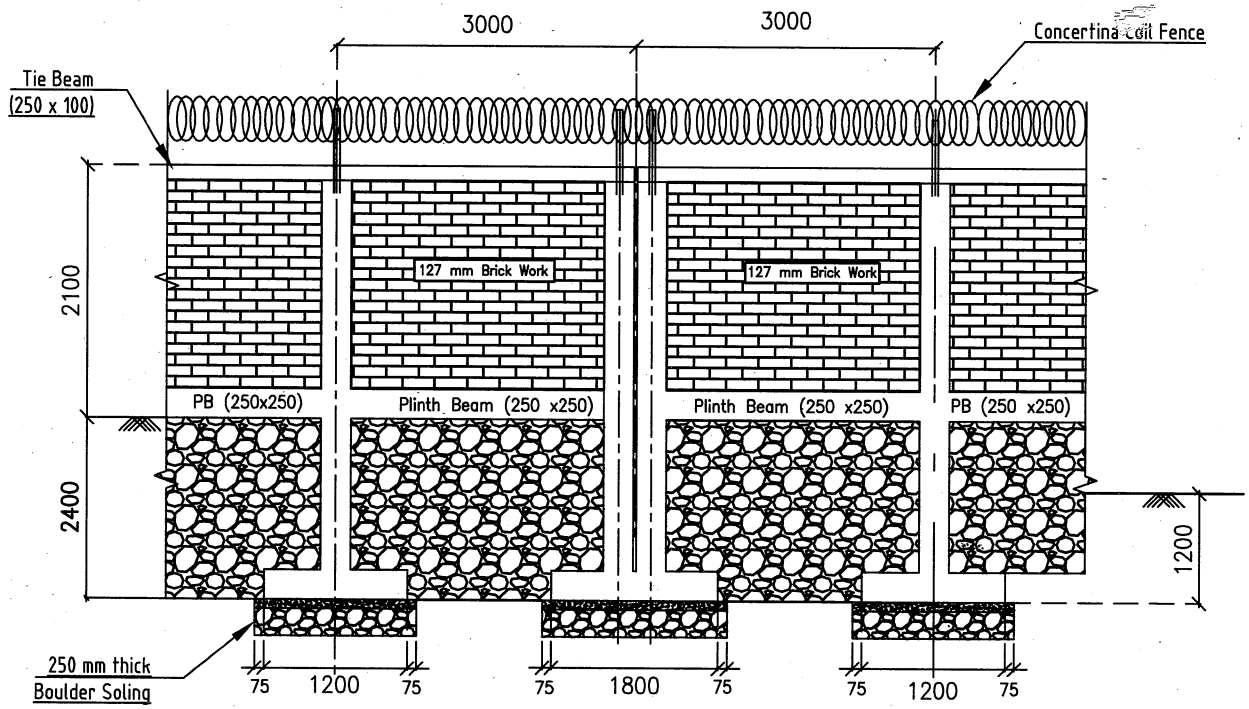

Typical Section

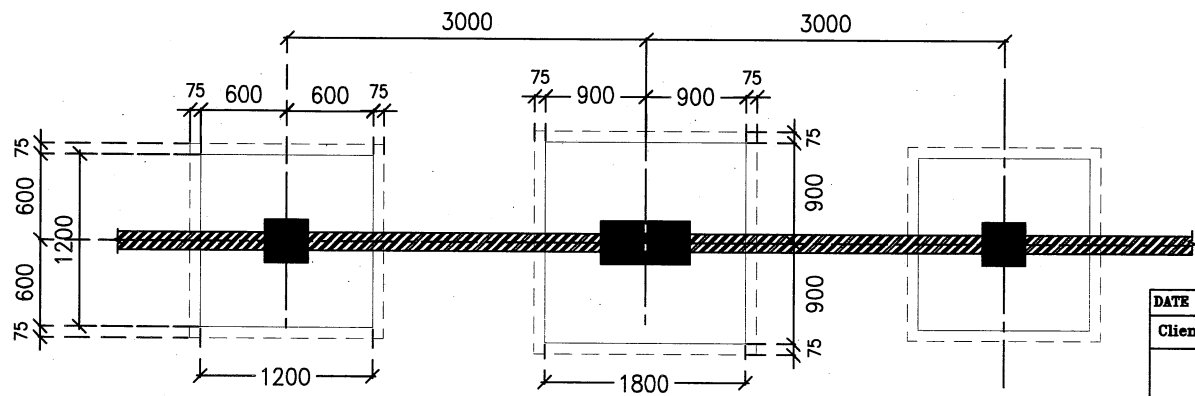

Foundation Plan

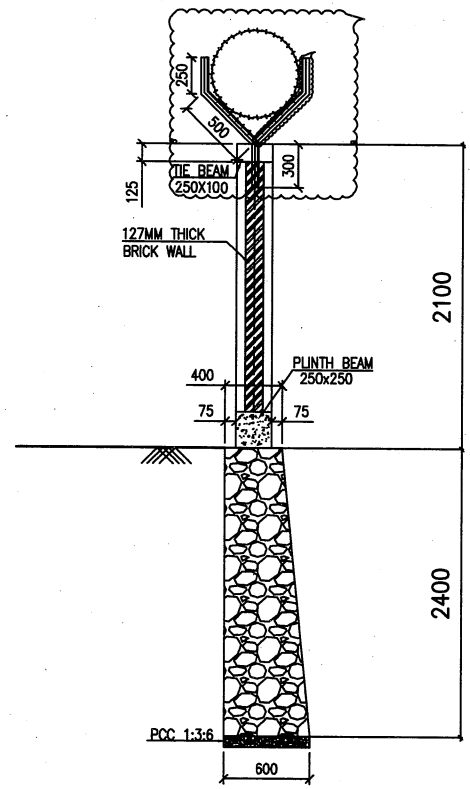

SECTION A-A

Note :

1. Expansion joint should be provided at 25m Spacing.
2. Concrete Grade should be M20 (Nominal mix), and steel grade should be Fe500D and above
3. Expansion joint of min 25 mm should be provided.
4. The brick used should be of 1st Quality having crushing strength value greater than 75 kg/Sq.Cm
5. The mortar for brickwork is 1:6 and for plaster 1:4

DATE	FIRST SUBMISSION	DESCRIPTION
Client Name :	ASSAM ELECTRICITY GRID CORPORATION LIMITED	
	Title : Tentative drawing of boundary wall at 132kV Hatsingimari GSS (Part D)	Paper Size A3 / Scale NTS
Page 01/02	Contractor Name : RA Associates	

Junior Manager
Mirza T & T Circle
AEGCL, Mirza

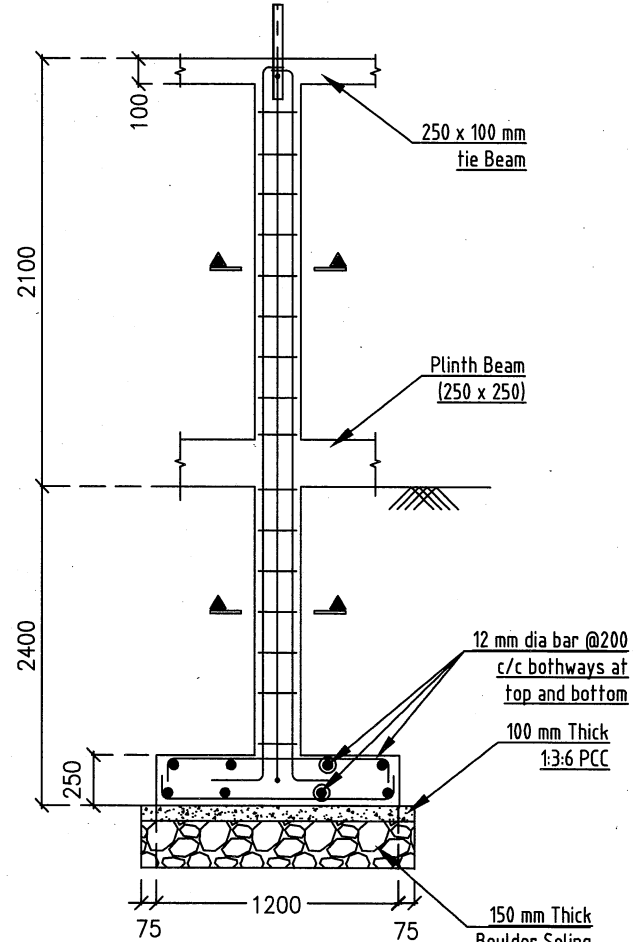

Section of F1

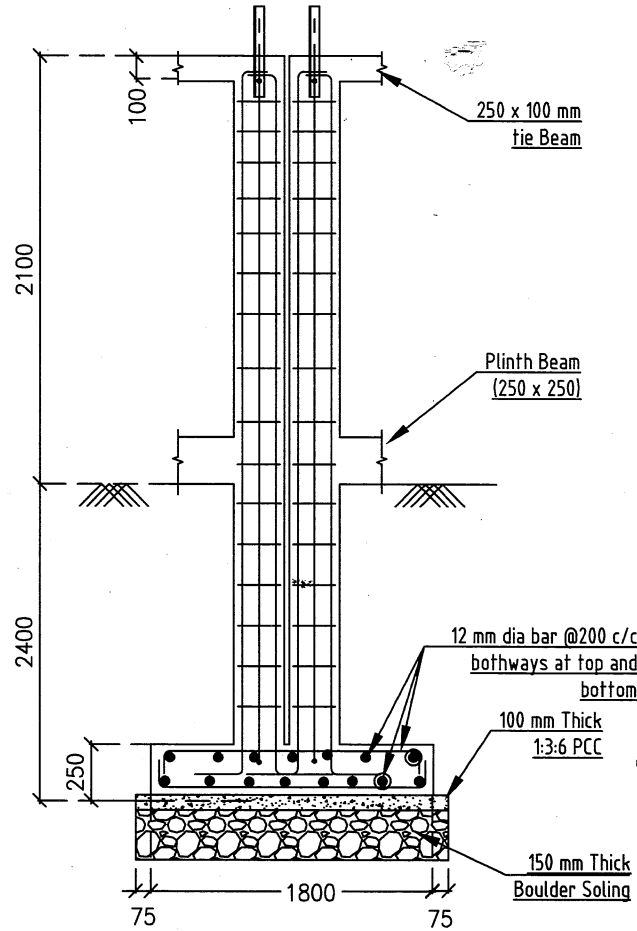

Section of F2

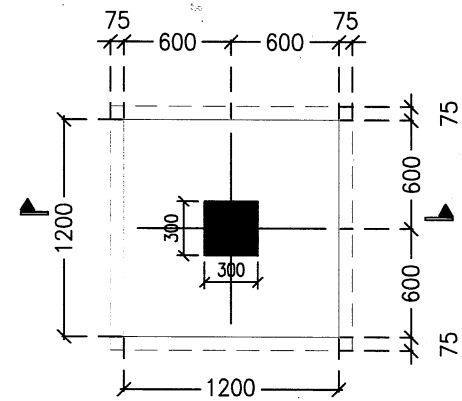

Foundation F1

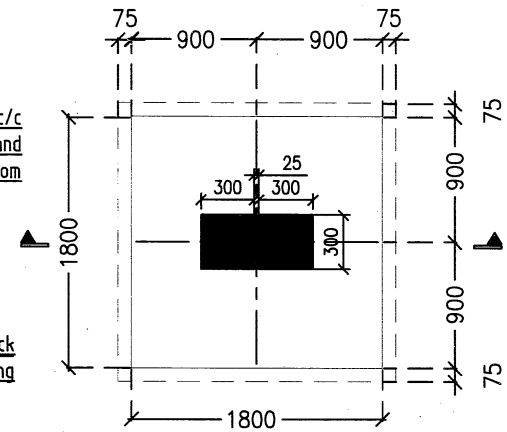

Foundation F2

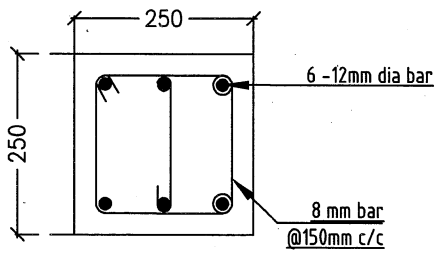

Plinth Beam Section

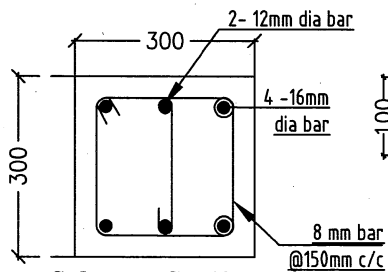

Column Section

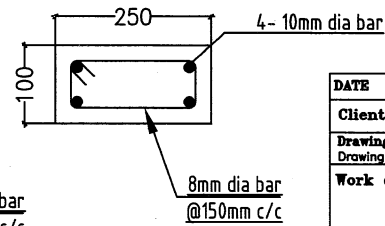

Tie Beam

DATE	FIRST SUBMISSION	DESCRIPTION
Client Name :	ASSAM ELECTRICITY GRID CORPORATION LIMITED	
Drawing Kind : Drawing For Approval.	Title : Tentative drawing of boundary wall at 132kV Hatsingimari GSS (Part D)	Paper Size A3
Work order No. :		Scale NTS
Page 02/02	Contractor Name : RA Associates	

Mirza T & T Circle
AESCL, Mirza

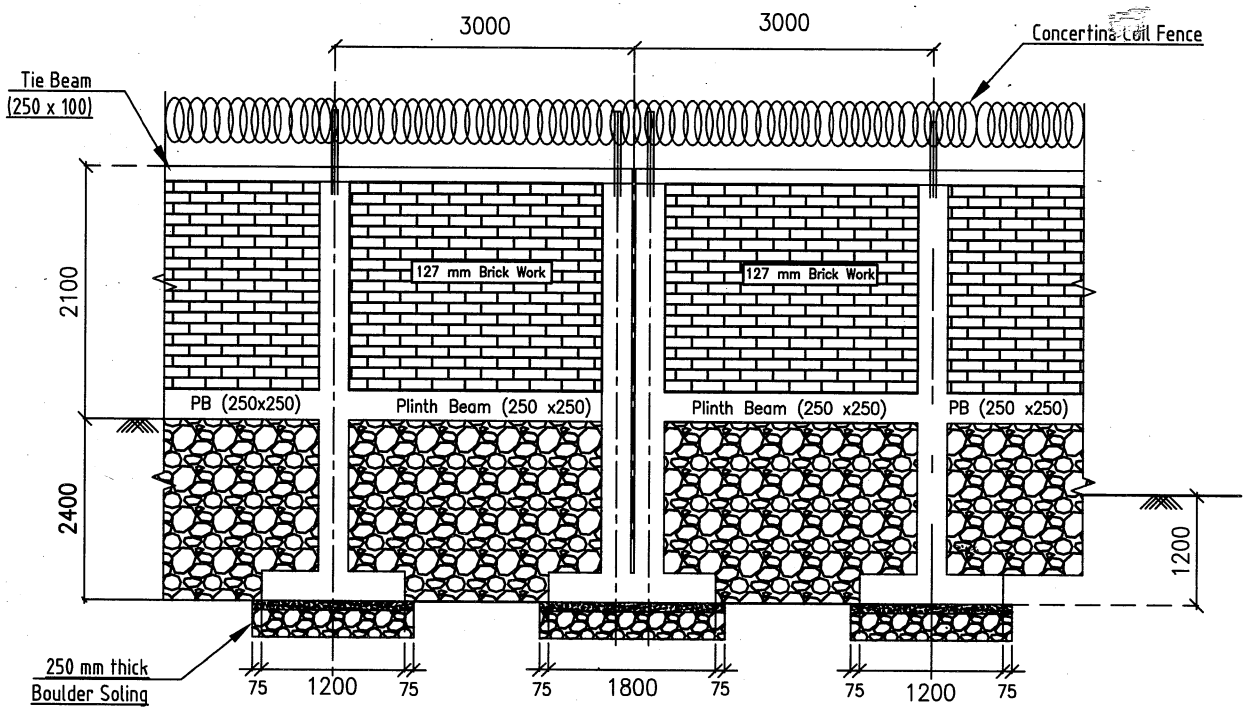

Typical Section

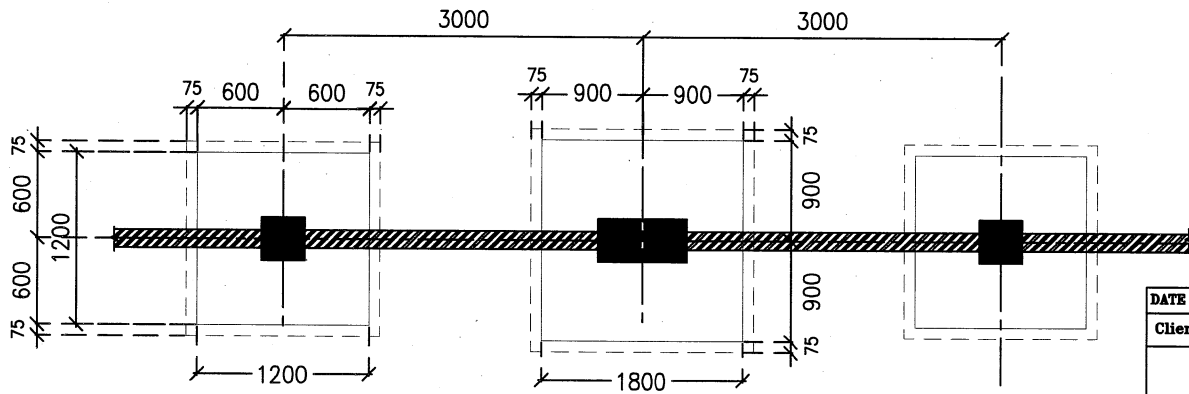

Foundation Plan

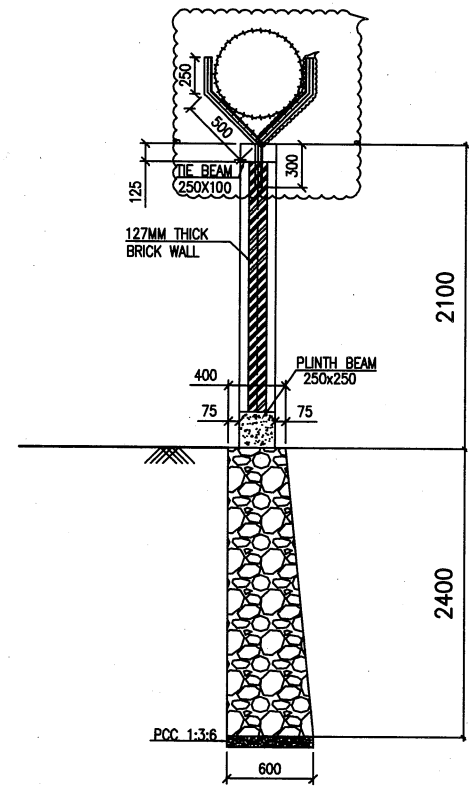

SECTION A-A

Note :

1. Expansion joint should be provided at 25m Spacing.
2. Concrete Grade should be M20 (Nominal mix), and steel grade should be Fe500D and above
3. Expansion joint of min 25 mm should be provided.
4. The brick used should be of 1st Quality having crushing strength value greater than 75 kg/Sq.Cm
5. The mortar for brickwork is 1:6 and for plaster 1:4

DATE	FIRST SUBMISSION	DESCRIPTION
Client Name :	ASSAM ELECTRICITY GRID CORPORATION LIMITED	
Nayan Junior Manager (Civil) Mirza T & T Circle AEGCL, Mirza	Title : Tentative drawing of boundary wall at 132kV Hatsingimari GSS (Part E)	Paper Size A3 / Scale NTS
Page 01/02	Contractor Name : RA Associates	

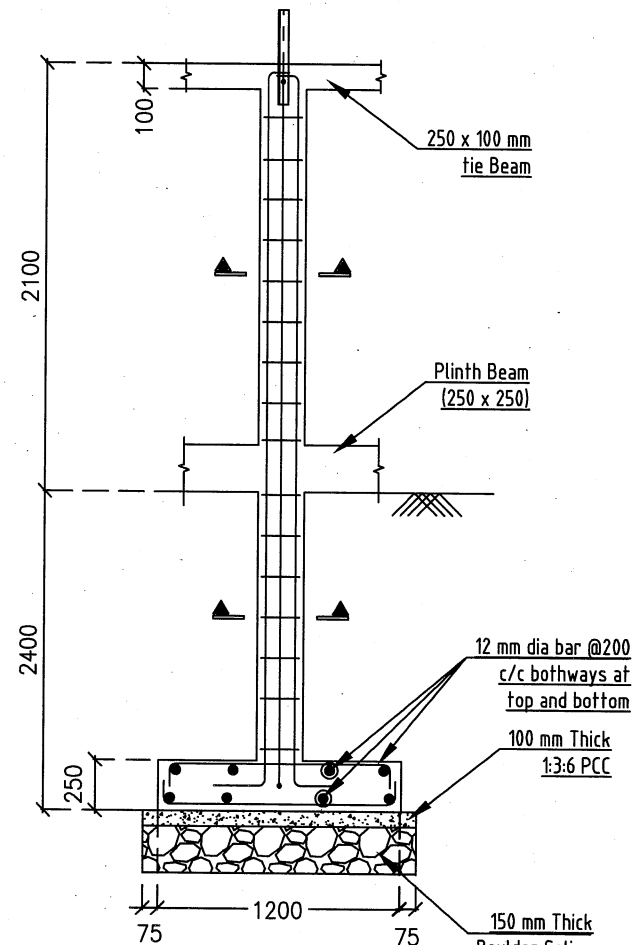

Section of F1

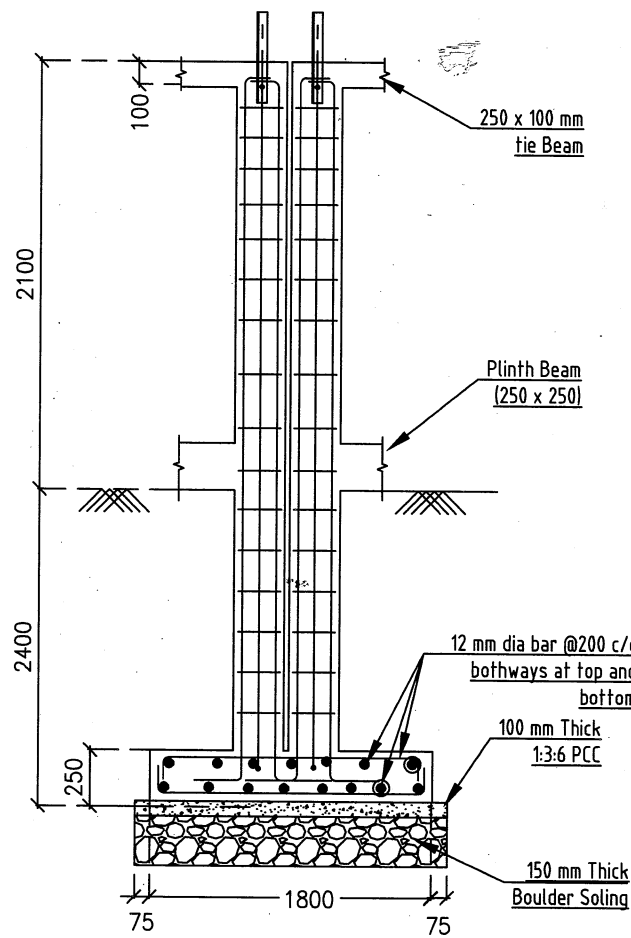

Section of F2

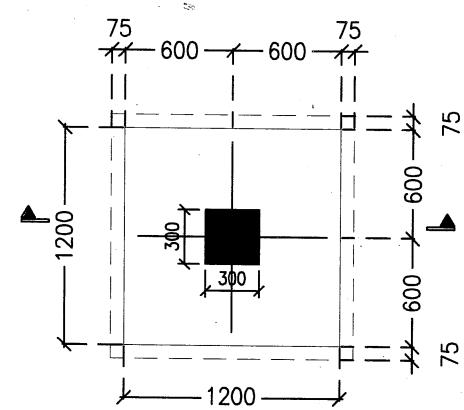

Foundation F1

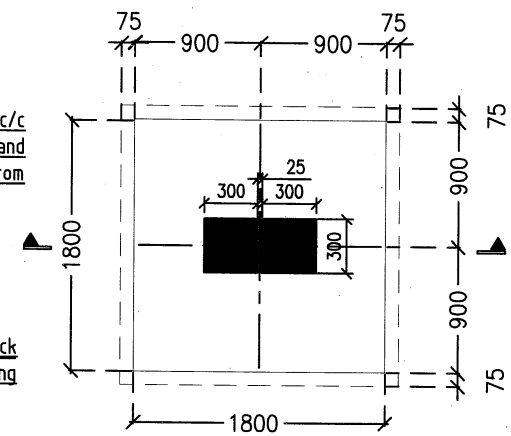

Foundation F2

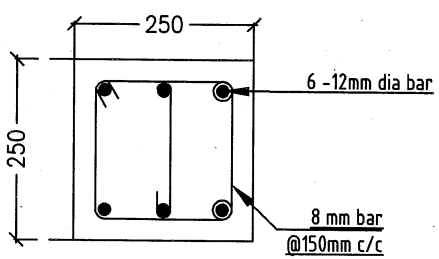

Plinth Beam Section

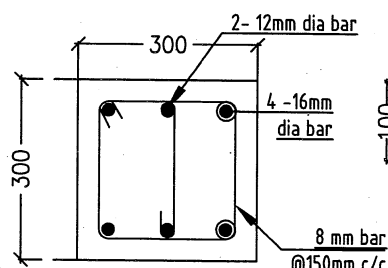

Column Section

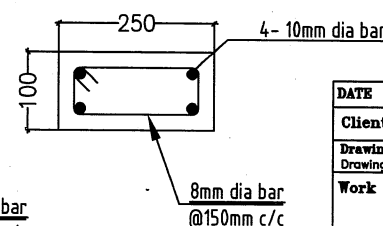

Tie Beam

DATE	FIRST SUBMISSION	DESCRIPTION
Client Name :	ASSAM ELECTRICITY GRID CORPORATION LIMITED	
Drawing Kind : Drawing For Approval.	Title : Tentative drawing of boundary wall at 132kV Hatsingimari GSS (Part E)	Paper Size A3
Work order No. :		Scale NTS
Page 02/02	Contractor Name : RA Associates	

Manager (CIVIL)
T & T Circle
AEGCL, Mizo

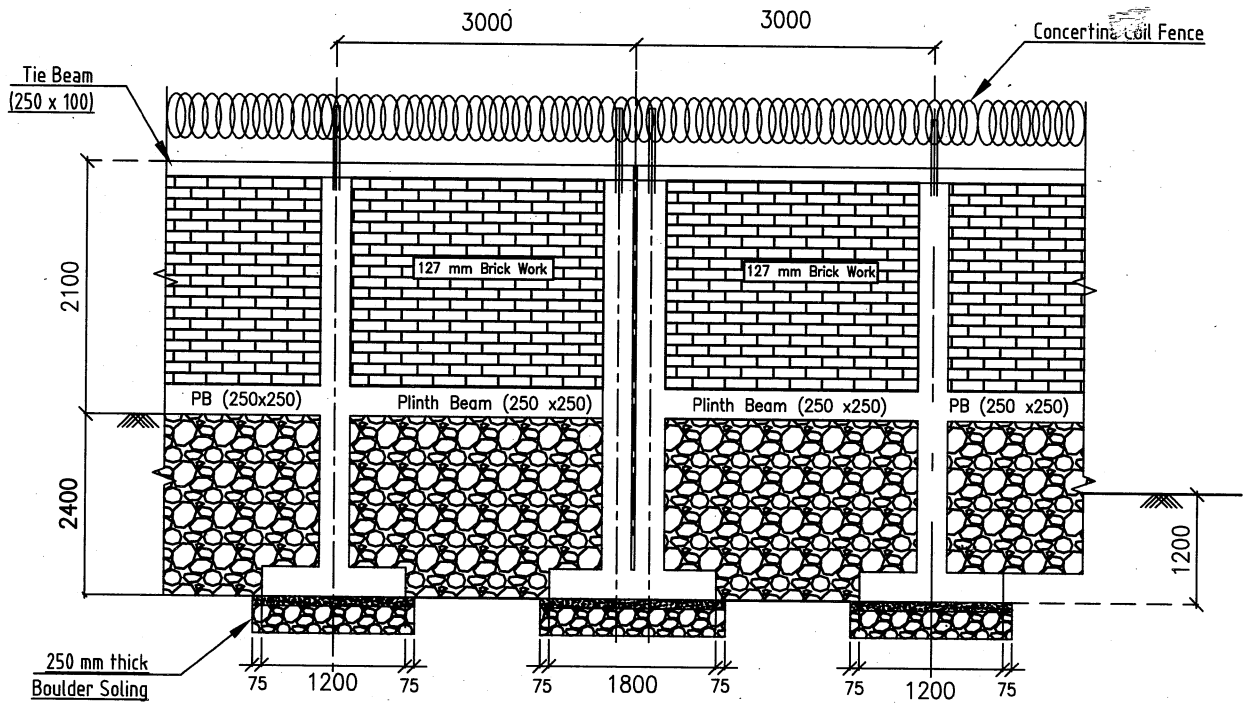

Typical Section

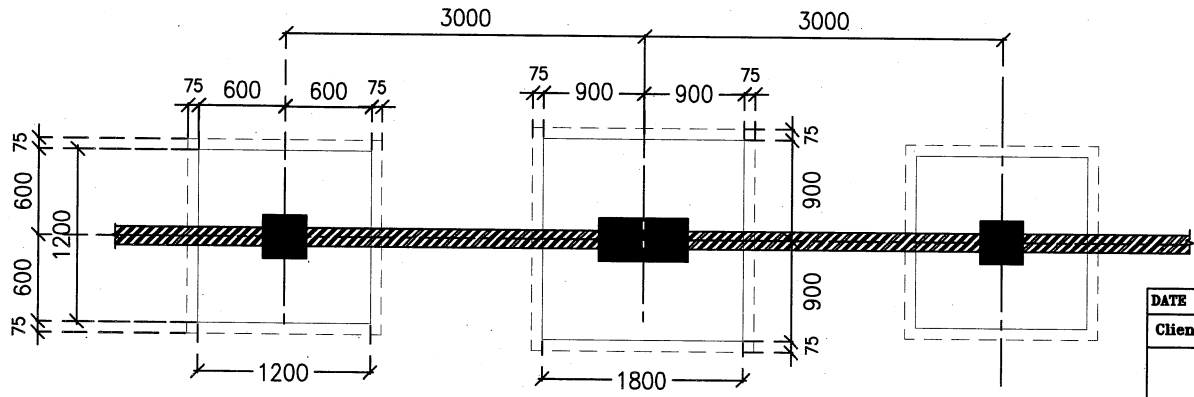

Foundation Plan

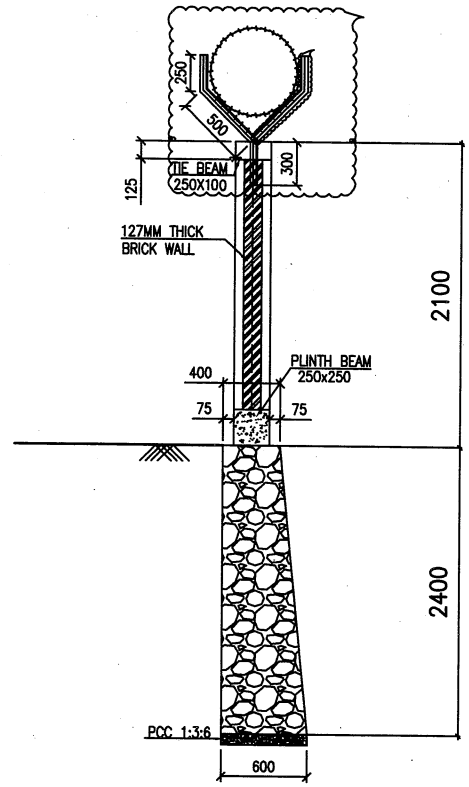

SECTION A-A

Note :

1. Expansion joint should be provided at 25m Spacing.
2. Concrete Grade should be M20 (Nominal mix), and steel grade should be Fe500D and above
3. Expansion joint of min 25 mm should be provided.
4. The brick used should be of 1st Quality having crushing strength value greater than 75 kg/Sq.Cm
5. The mortar for brickwork is 1:6 and for plaster 1:4

DATE	FIRST SUBMISSION	DESCRIPTION
Client Name :	ASSAM ELECTRICITY GRID CORPORATION LIMITED	
	Title: Tentative drawing of boundary wall at 132kV Hatsingimari GSS (Part F)	Paper Size A3 / Scale NTS
Page 01/02	Contractor Name : RA Associates	

Junior Manager (C.M.)
Mirza T & T Circle
AEGCL, Mirza

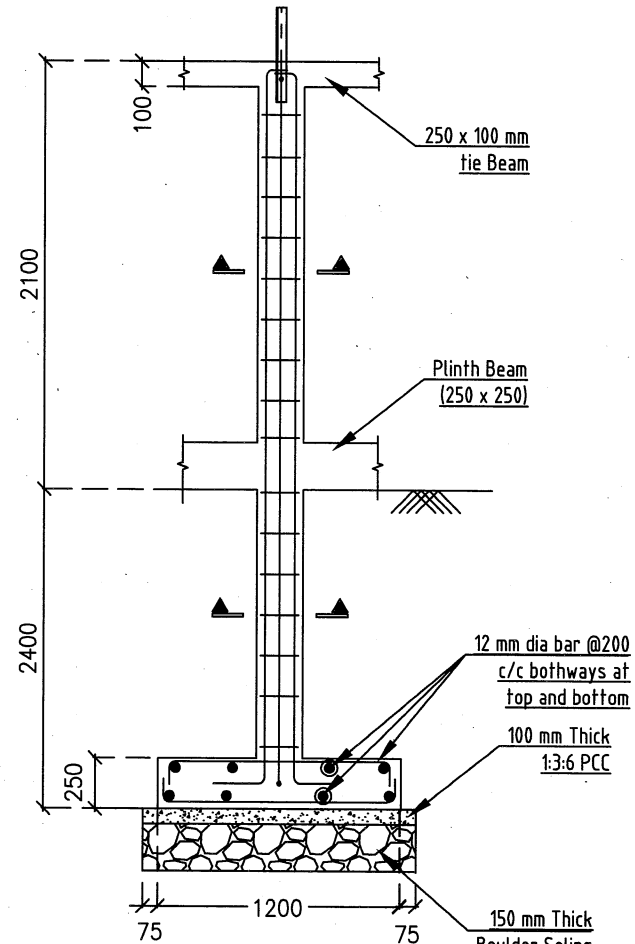

Section of F1

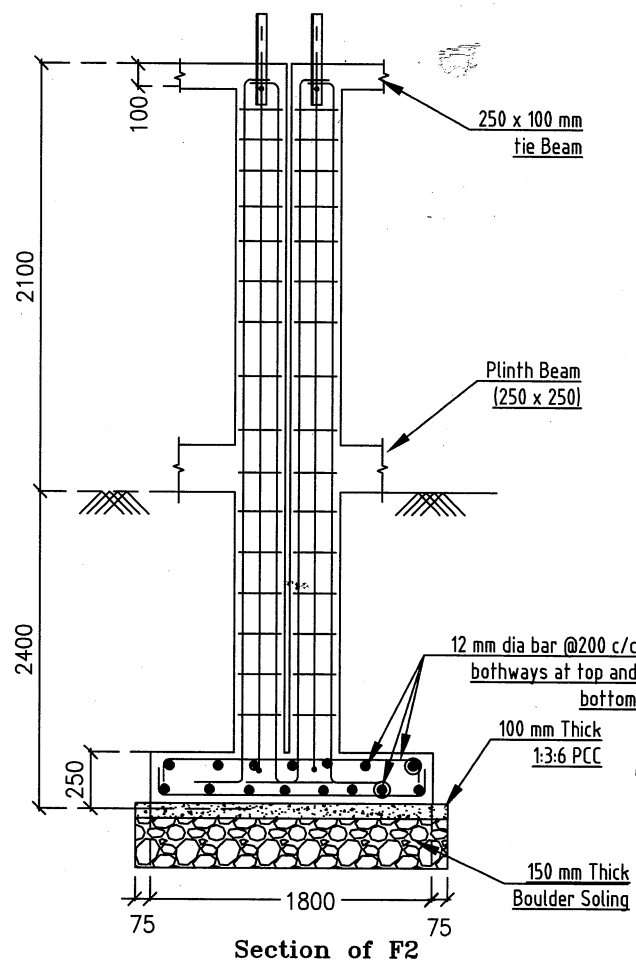

Section of F2

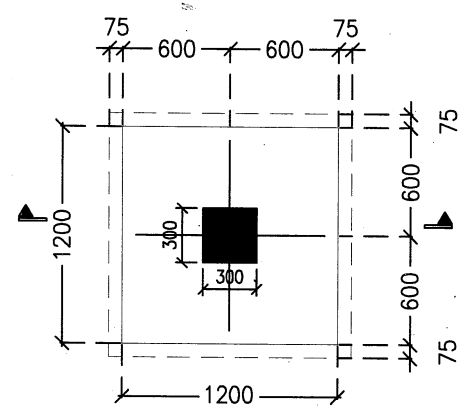

Foundation F1

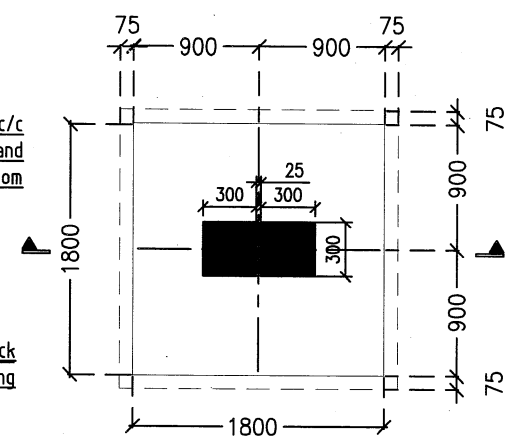

Foundation F2

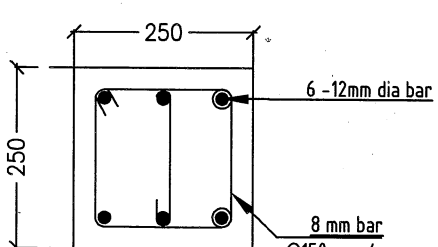

Plinth Beam Section

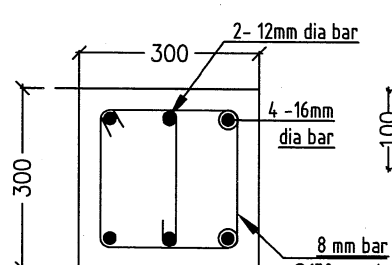

Column Section

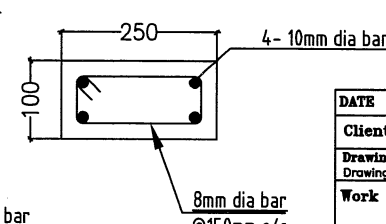

Tie Beam

DATE	FIRST SUBMISSION	DESCRIPTION
Client Name :	ASSAM ELECTRICITY GRID CORPORATION LIMITED	
Drawing Kind : Drawing For Approval.	Title : Tentative drawing of Boundary wall at 132kV Hatsingimari GSS (Part F)	Paper Size A3
Work order No. :		Scale NTS
Page 02/02	Contractor Name : RA Associates	

Manager (Civil)
Mirza T & T Cell
AEGCL, Mirza